| 標 | 型式 | W | RB | P | 重量(kg) |
|---|---|---|---|---|---|
| ◎ | BUJ-301090 | 300 | 1210 | 92.03 | 12.2 |
| ◎ | BUJ-401090 | 400 | 1310 | 96.39 | 13.8 |
| ◎ | BUJ-501090 | 500 | 1410 | 100.78 | 15.4 |
| ◎ | BUJ-601090 | 600 | 1510 | 105.14 | 17.0 |
| | | | | | |
| | | | | | |
| | | | | | |
| | | | | | |

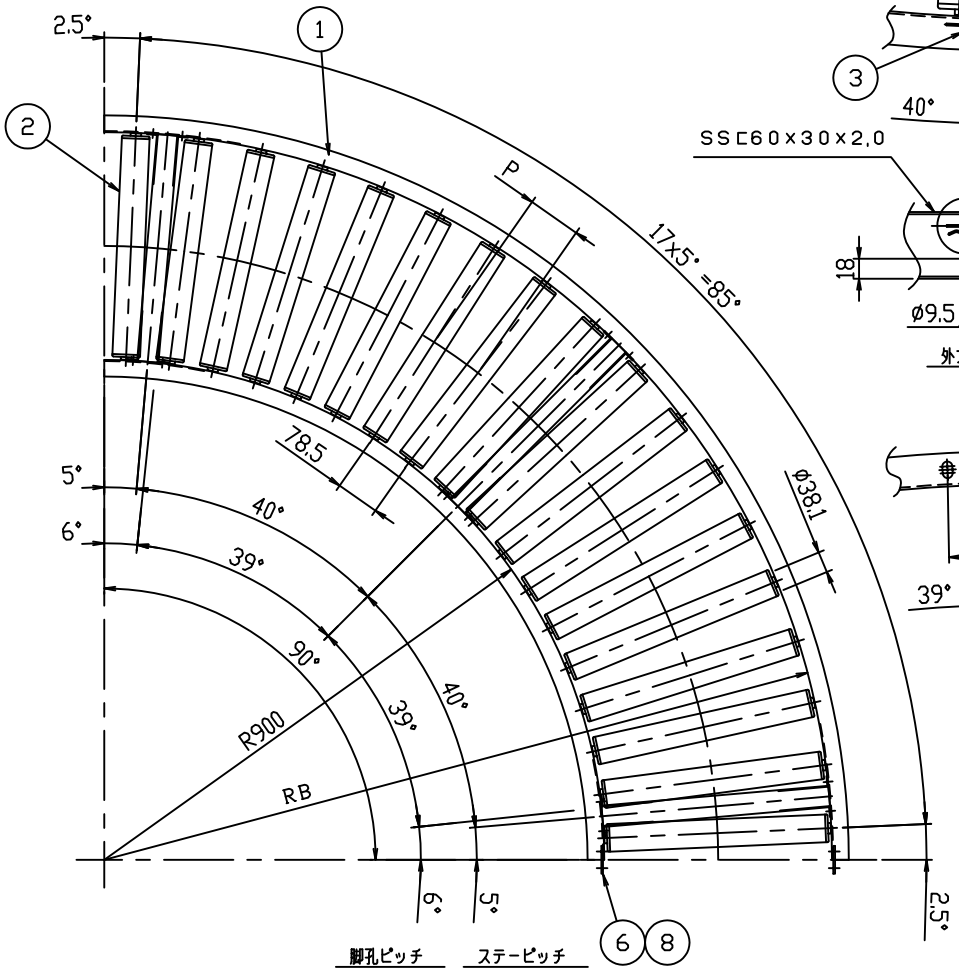


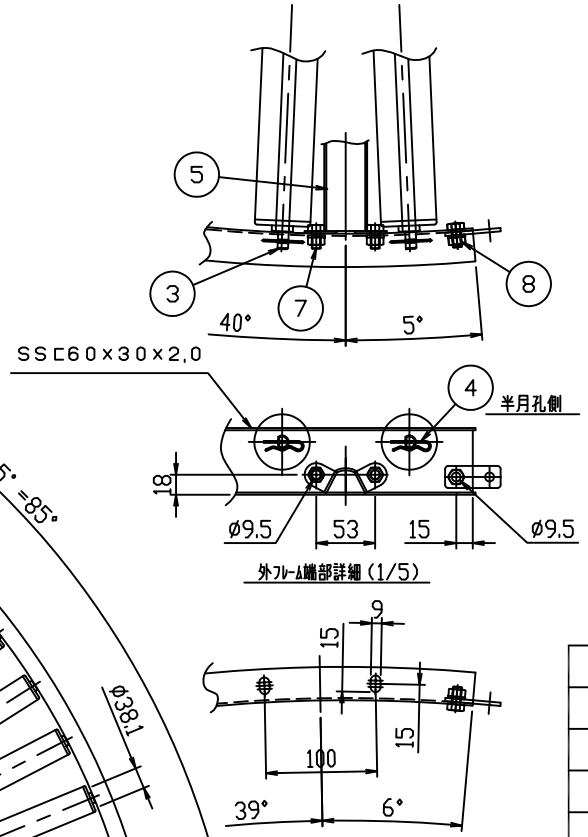


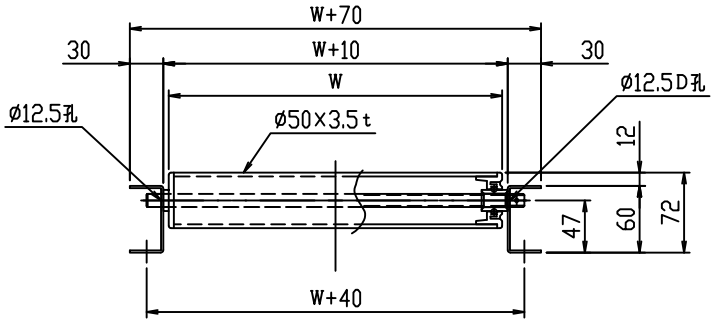


断面詳細(1/5)

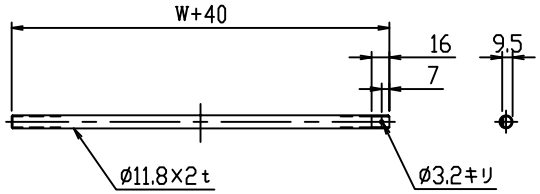


軸詳細(1/5)

| ITEM | NAME | REQ'D | MAT'L | WEIGHT | TOTAL WEIGHT | CODE OR REMARKS |
|---|---|---|---|---|---|---|
| 8 | B, N, SW | 4 | | | | M8X16 |
| 7 | B, N, SW | 12 | | | | M8X16 |
| 6 | ジョイント金具 | 2 | | | | |
| 5 | MU38ステー | 3 | | | | |
| 4 | スナップピン | 18 | | | | |
| 3 | シャフト | 18 | | | | |
| 2 | ローラ | 18 | | | | |
| 1 | フレーム | 1組 | | | | |

| | | | | | |
|---|---|---|---|---|---|
| 標　準 | | | 樹脂ローラコンベヤ | | |
| SET | SCALE 1:10 | | BUJ形 ø50X3.5t | | |
| | DATE '13. 9. 3 | | 90°カーブ組立図 P100 | | |
| APPD. | CHKD. | CHKD. | CHKD. | DWN. | DWG. No. — — REV. |
| 三機工業株式会社 SANKI ENGINEERING CO.,LTD TOKYO JAPAN | | | | | CODE BUJ - 1012 - CLASS |

| No. | MARK | REVISION | DATE | REVISED | APPD | TABLE No. | J / # |
|---|---|---|---|---|---|---|---|